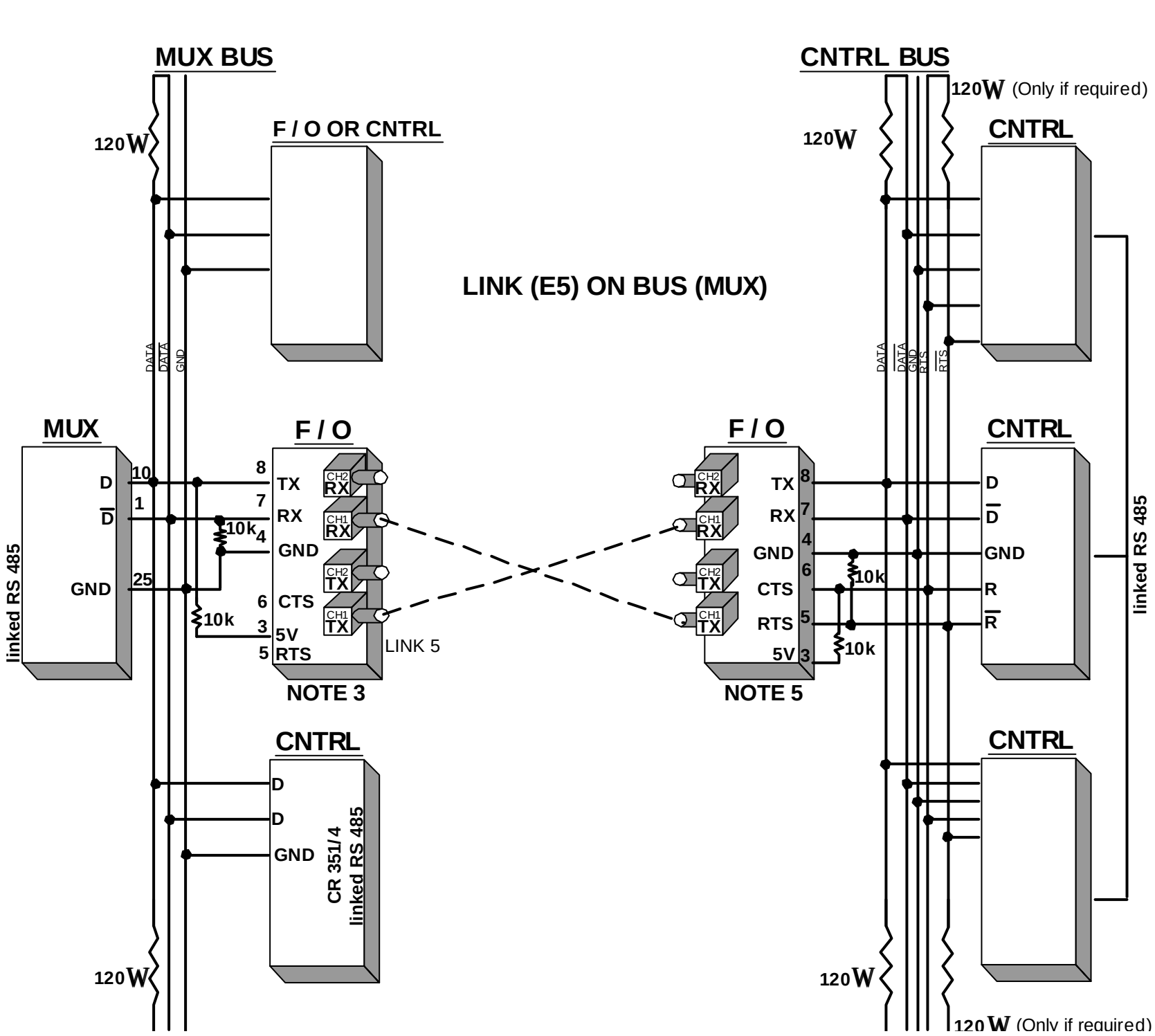

NOTE: 0 10k resistors at F/O on CNTRL BUS R/R (Prevents problem with "NO CNTRLS")

NOTE: 1 120 at the two ends of D/D and R/R BUSSES

NOTE: 2 Only one F/O on CNTRL BUS

NOTE: 3 All F/O on MUX BUS has Link 5

NOTE: 4 F/O with PAL B34F

NOTE: 5 F/O link RPT if fibre RX to another fibre TX

NOTE: 6 Use fibre pair TX; RX (leftmost or rightmost)